A13JF3A1 | More Confidential

Ra6.3 (G Ra0.4)

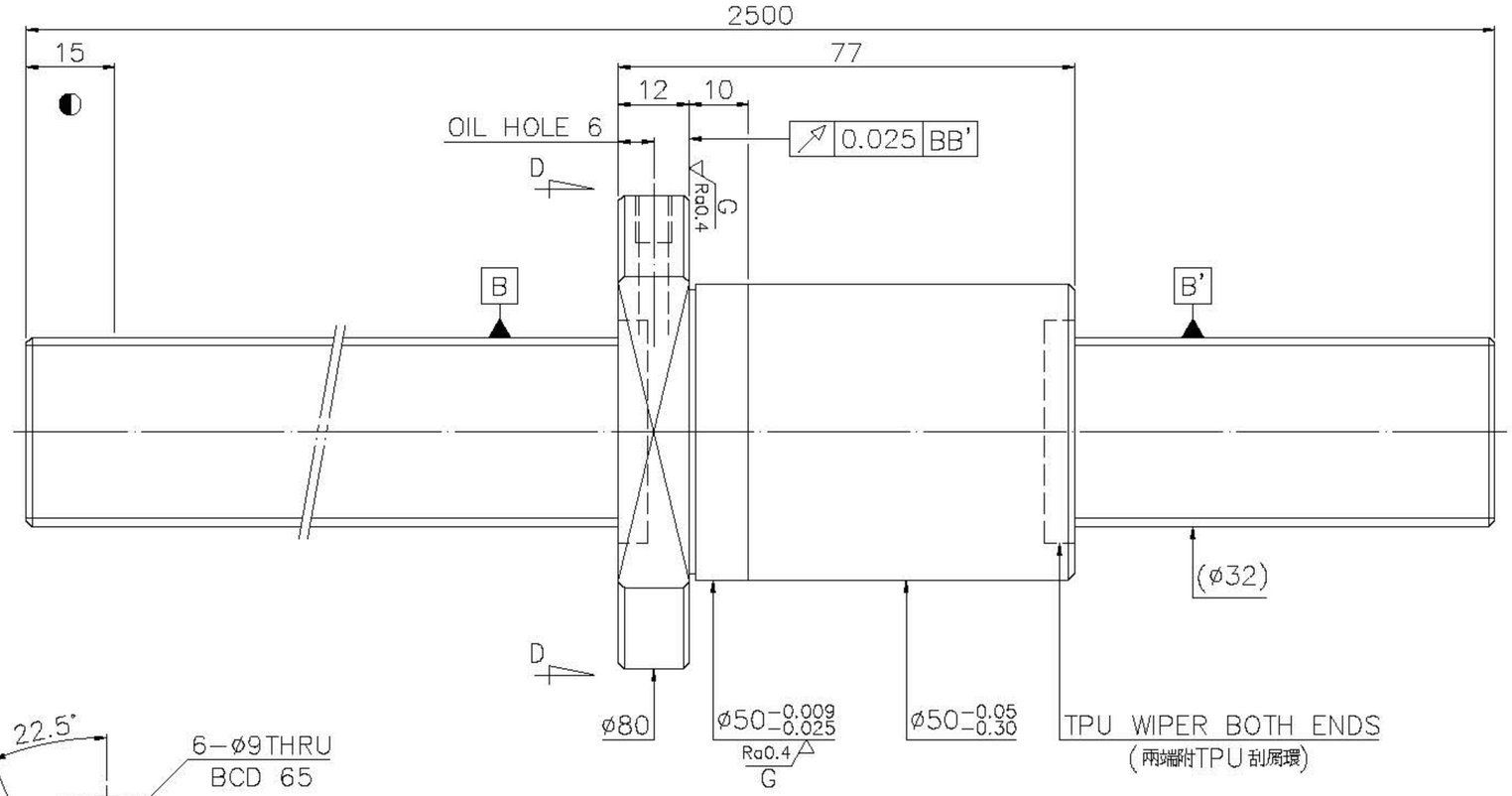

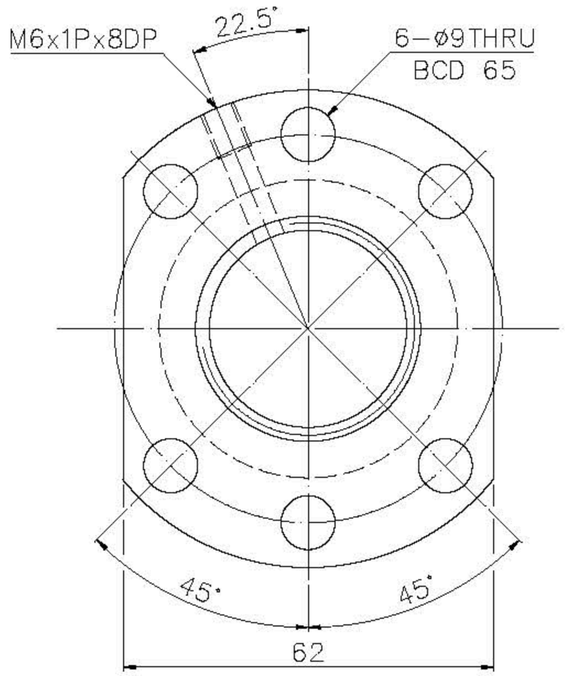

D-D VIEW

SPEC: R32-10K5- FSCEW-2500-2500-0.023

MAX. AXIAL LOAD (kgf)		LUBRICATION		PRELOAD (kgf)	136
MAX. ROTATIONAL SPEED (rpm)		SPACE BALL		R.D.	27.424
DN VALUE		E1 TYPE ASSEMBLY METHOD		S.F. (kgf)	0.16~1.93
MAX. FEED RATE (m/min)		CUSTOMER DRAWING NO.		DRAG TORQUE (kgf-cm)	0.51~6.29
ACCELERATION (m/sec²)		CUSTOMER MC TYPE		DIRECTION OF TURN	R
SUPPORT METHOD		CUSTOMER AXIAL TYPE		P.C. DIA.	31.48
				BALL DIA.	3.969
				BACKLASH	0
				CIRCUIT	5
				LEAD ANGLE	5.77
				DYNAMIC (kgf)	3390
				STATIC (kgf)	8160
				LEAD	10

THREAD LENGTH

V_{300p}: 0.023

ep: 0.192

UNCHAMFERED USE ☐C0.5 ■C1 ☐C

ROUGH M/C	FIN M/C	GRD
Ra25	Ra6.3	Ra0.4

SCALE 1:X

NORMAL TOLERANCE mm

UP TO 6	6 30	30 120	120 300	300 600	600 1200	1200 2400	OVER 2400
±0.1	±0.2	±0.3	±0.4	±0.5	±0.8	±1.0	±1.5

HIWIN® BALLSCREWS

MAT.	SH:CF53/Equivalent	DATE	2018.02.14
	NT:SNCM220/Equivalent	DWG	Hani
THREAD BALL TRACK HRC 56 ~ 62		CHK	Melanie
		APPD	Michelle
CUSTR	H-CHICAGO		
DWG.NO.	A13JF3A1		

*BREAK SHARP EDGE UNLESS OTHER SPECIFIED.
*未畫倒角者去毛邊 (C0.2MAX)

THREAD END ALLOWS ABOVE LENGTH OUT OF HARDNESS TOLERANCE

DATE	MODIFICATION	APPROVED

* PLEASE IGNORE CHINESE CHARACTERS WHICH ARE FOR OUR REFERENCE ONLY.