A12EW5A2

Released by HIWIN design group.

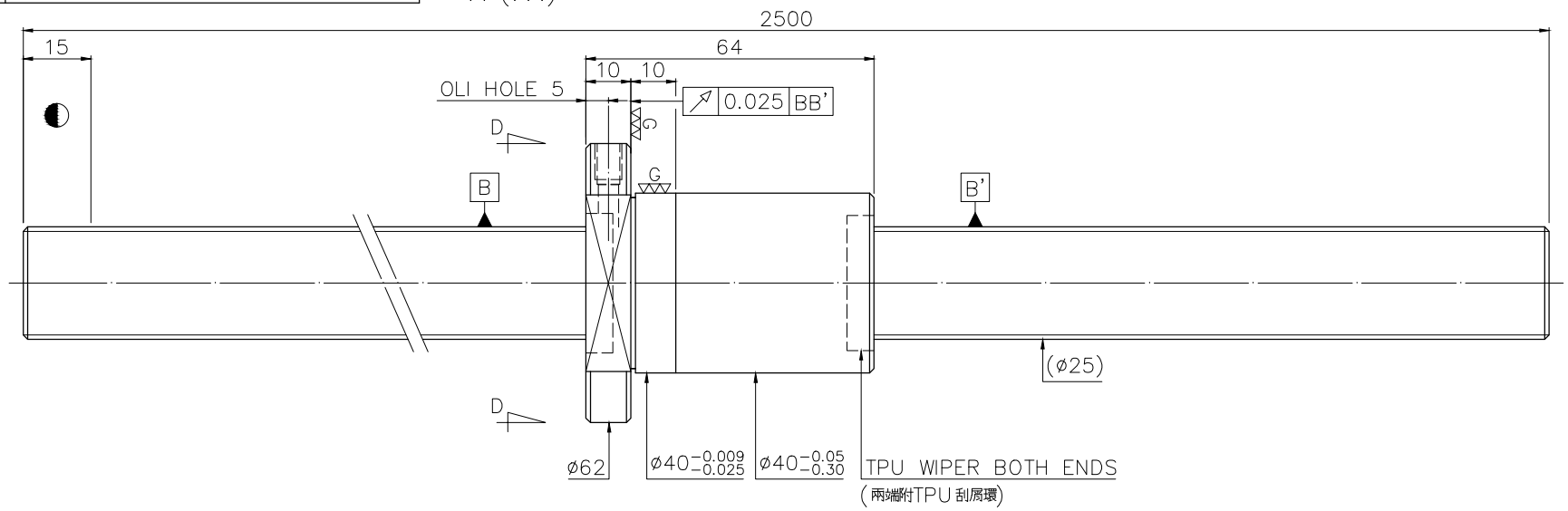

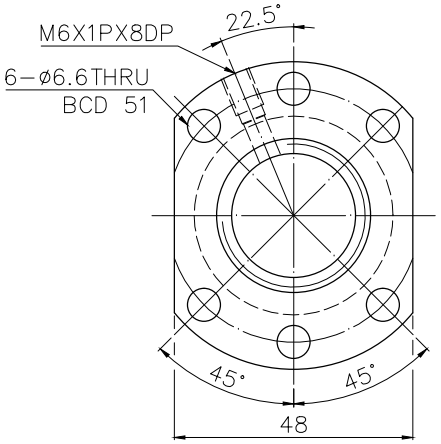

D-D VIEW

SPEC: R25-10K4- FSCEW-2500-2500-0.023

MAX. AXIAL LOAD (kgf)		LUBRICATION		PRELOAD (kgf)	66
MAX. ROTATIONAL SPEED (rpm)		SPACE BALL		R.D.	21.239
DN VALUE		E1 TYPE ASSEMBLY METHOD		S.F. (kgf)	0.09~1.05
MAX. FEED RATE (m/min)		CUSTOMER DRAWING NO.		DRAG TORQUE (kgf-cm)	0.22~2.68
ACCELERATION (m/sec²)		CUSTOMER MC TYPE		DIRECTION OF TURN	R
SUPPORT METHOD		CUSTOMER AXIAL TYPE		P.C. DIA.	24.37
				BALL DIA.	3
				BACKLASH	0
				CIRCUIT	4
				LEAD ANGLE	7.44
				DYNAMIC (kgf)	1660
				STATIC (kgf)	3680
				LEAD	10

THREAD LENGTH

+ 0 −

T_p, e_p, e_p

ν_{300p}: 0.023

ep: 0.192

UNCHAMFERED USE ☐C0.5 ■C1 ☐C

ROUGH M/C	FIN M/C	GRD	SCALE
25a	6.3a	0.4a	1:X

NORMAL TOLERANCE mm

UP TO 6	6 30	30 120	120 300	300 600	600 1200	1200 2400	OVER 2400
±0.1	±0.2	±0.3	±0.4	±0.5	±0.8	±1.0	±1.5

HIWIN® BALLSCREWS

MAT.	SH: CF53/Equivalent	DATE	2013.12.20
	NT: SNCM220/Equivalent	DWG	Kent
THREAD BALL TRACK HRC 56 ~ 62		CHK	Akuan
		APPD	Kai
CUSTR	H-CHICAGO		
DWG.NO.	A12EW5A2		

*BREAK SHARP EDGE UNLESS OTHER SPECIFIED.
*未畫倒角者去毛邊 (C0.2MAX)

THREAD END ALLOWS ABOVE LENGTH OUT OF HARDNESS TOLERANCE

DATE	MODIFICATION	APPROVED
2013.12.20	MOD. 1	Kai

* PLEASE IGNORE CHINESE CHARACTERS WHICH ARE FOR OUR REFERENCE ONLY.