A122XRA2 | More Confidential

Ra6.3 (G Ra0.4)

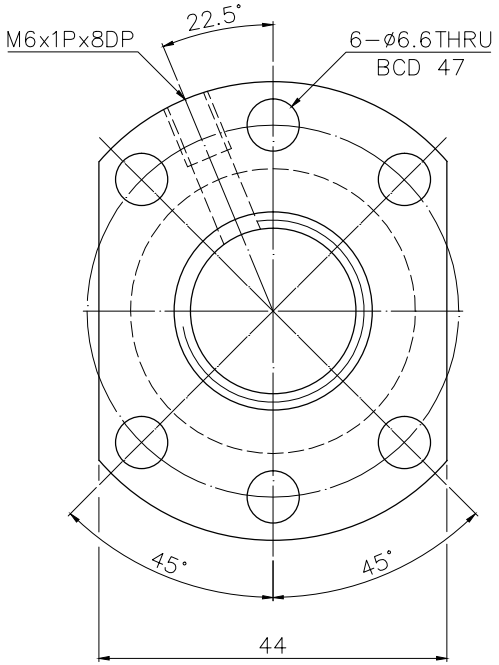

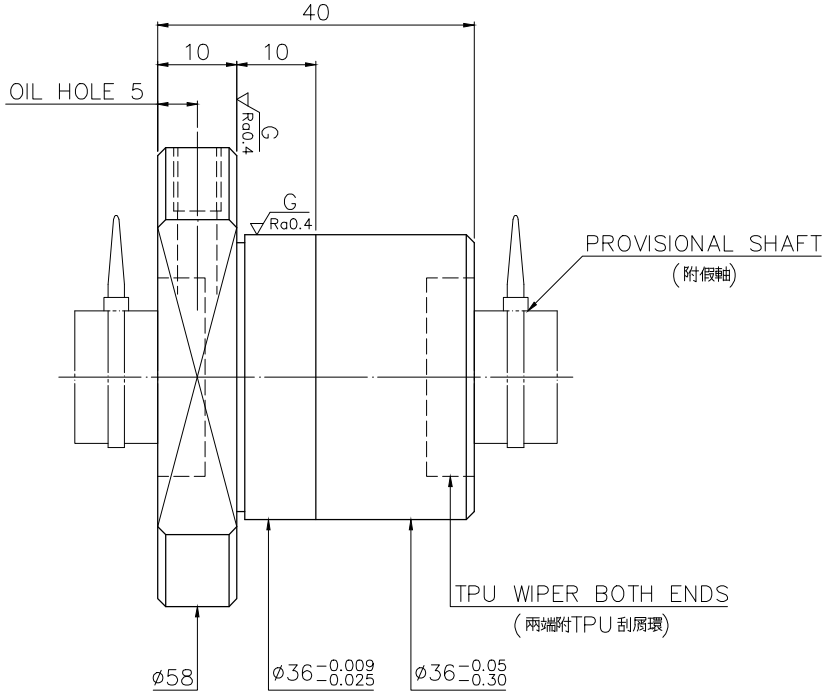

NOTE:

1. CORRESPONDING SHAFT HAS A ROOT DIAMETER OF 16.789mm

SPEC: R20−5K4−FSCEW−E

MAX. AXIAL LOAD (kgf)		LUBRICATION	
MAX. ROTATIONAL SPEED (rpm)		SPACE BALL	
DN VALUE		EI TYPE ASSEMBLY METHOD	
MAX. FEED RATE (m/min)		CUSTOMER DRAWING NO.	
ACCELERATION (m/sec²)		CUSTOMER MC TYPE	
SUPPORT METHOD		CUSTOMER AXIAL TYPE	

PRELOAD (kgf)	~
R.D.	~
S.F. (kgf)	~
DRAG TORQUE (kgf-cm)	~
DIRECTION OF TURN	R
P.C. DIA.	19.92
BALL DIA.	3
BACKLASH	0.03MAX
CIRCUIT	4
LEAD ANGLE	4.57
DYNAMIC (kgf)	1500
STATIC (kgf)	2930
LEAD	5

THREAD LENGTH

V_{300p}: ~

ep: ~

UNCHAMFERED USE ■C0.5 □C1 □C

ROUGH M/C	FIN M/C	GRD	SCALE
Ra25	Ra6.3	Ra0.4	1:X

NORMAL TOLERANCE mm

UP TO 6	6 30	30 120	120 300	300 600	600 1200	1200 2400	OVER 2400
±0.1	±0.2	±0.3	±0.4	±0.5	±0.8	±1.0	±1.5

HIWIN® BALLSCREWS

MAT.	SH:ROLLED	DATE	2017.10.24
	NT:SNCM220/Equivalent	DWG	Yolin
THREAD BALL TRACK HRC 56 ~ 62		CHK	Hani
		APPD	Michelle
CUSTR	HIWIN STD.		
DWG.NO.	A122XRA2		

*BREAK SHARP EDGE UNLESS OTHER SPECIFIED.
*未畫倒角者去毛邊 (C0.2MAX)

THREAD END ALLOWS ABOVE LENGTH OUT OF HARDNESS TOLERANCE

DATE	MODIFICATION	APPROVED
2017.10.24	MOD. 1	Michelle

* PLEASE IGNORE CHINESE CHARACTERS WHICH ARE FOR OUR REFERENCE ONLY.