A11455A1

Released by HIWIN design group.

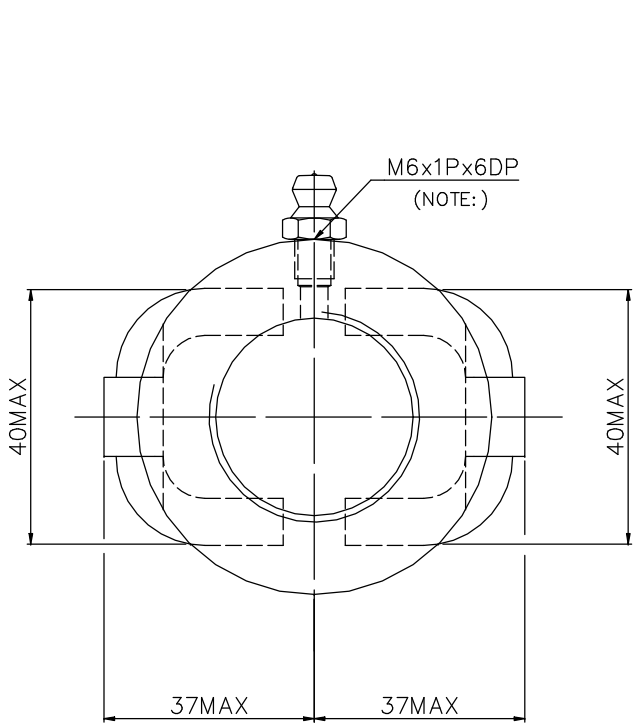

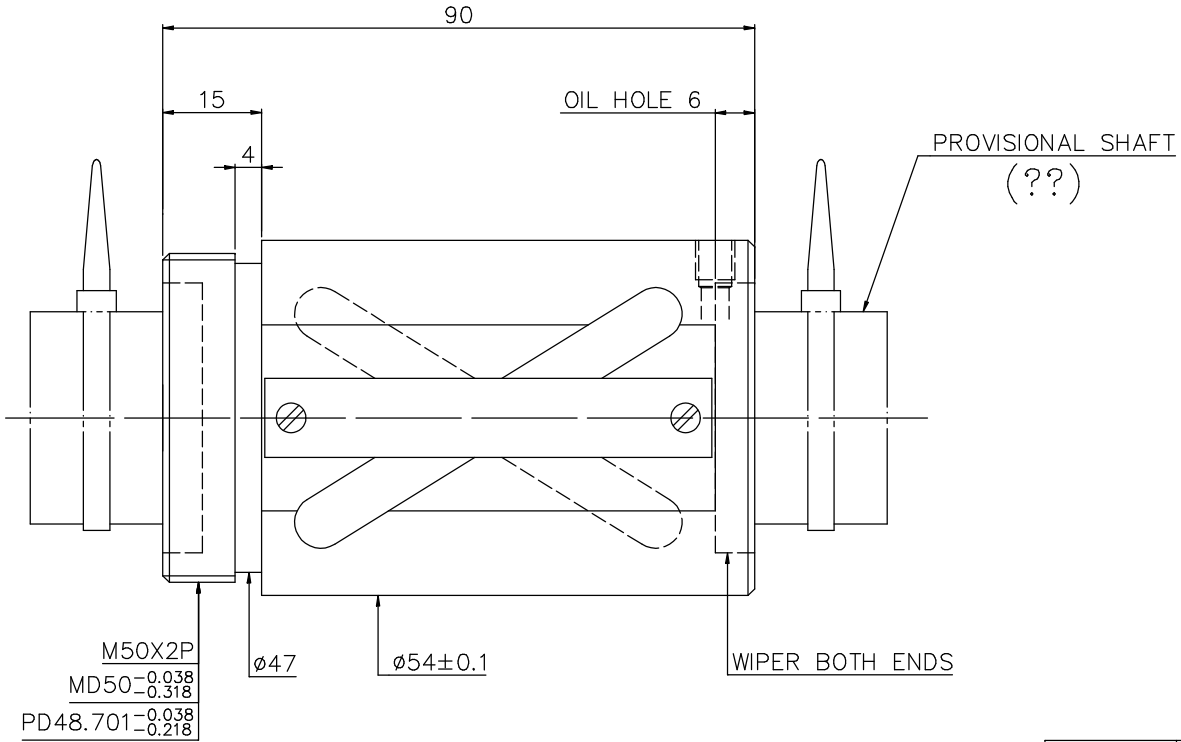

NOTE: WITH NIPPLE

SPEC: 4R32-32A2-DRSV

MAX. AXIAL LOAD (kgf)		LUBRICATION		PRELOAD (kgf)	~
MAX. ROTATIONAL SPEED (rpm)		SPACE BALL		R.D	~
DN VALUE		E1 TYPE ASSEMBLY METHOD		S.F (kgf)	
MAX. FEED RATE (m/min)		CUSTOMER DRAWING NO.		DRAG TORQUE (kgf-cm)	
ACCELERATION (m/sec²)		CUSTOMER MC TYPE		DIRECTION OF TURN	R
SUPPORT METHOD		CUSTOMER AXIAL TYPE		PC DIA.	33.26
				BALL DIA.	4.763
				BACKLASH	~
				CIRCUIT	1.5*2
				LEAD ANGLE	17.03
				DYNAMIC (kgf)	~
				STATIC (kgf)	~
				LEAD / PITCH	32/16

THREAD LENGTH

+ 0 −

E300:

UNCHAMFERED USE ☐R0.5 ■R1 ☐R

ROUGH M/C	FIN M/C	GRD	SCALE
25a	6.3a	0.4a	1: X

UNTOL DIMN mm

UP TO 6	6 30	30 120	120 300	300 600	600 1200	1200 2400	OVER 2400
±0.1	±0.2	±0.3	±0.4	±0.5	±0.8	±1.0	±1.5

HIWIN® BALLSCREWS

MATAL	SH: ROLLED	DATE	2007.05.01
	NT: SNCM220/SCM415	DWG	Dan
THREAD BALL TRACK HRC 56 ~~ 62		APPD	Michelle
		PROCESS NO.	G
CUSTR	H-CHICAGO		
DWG.NO.	A11455A1		

*BREAK SHARP EDGE UNLESS OTHER SPECIFIED.
*??????R0.5MAX

THREAD END ALLOWS ABOVE LENGTH OUT OF HARDNESS TOLERANCE

DATE	MODIFICATION	APPROVED

* PLEASE IGNORE CHINESE CHARACTERS WHICH ARE FOR OUR REFERENCE ONLY.