A11454A2 | Released by HIWIN design group.

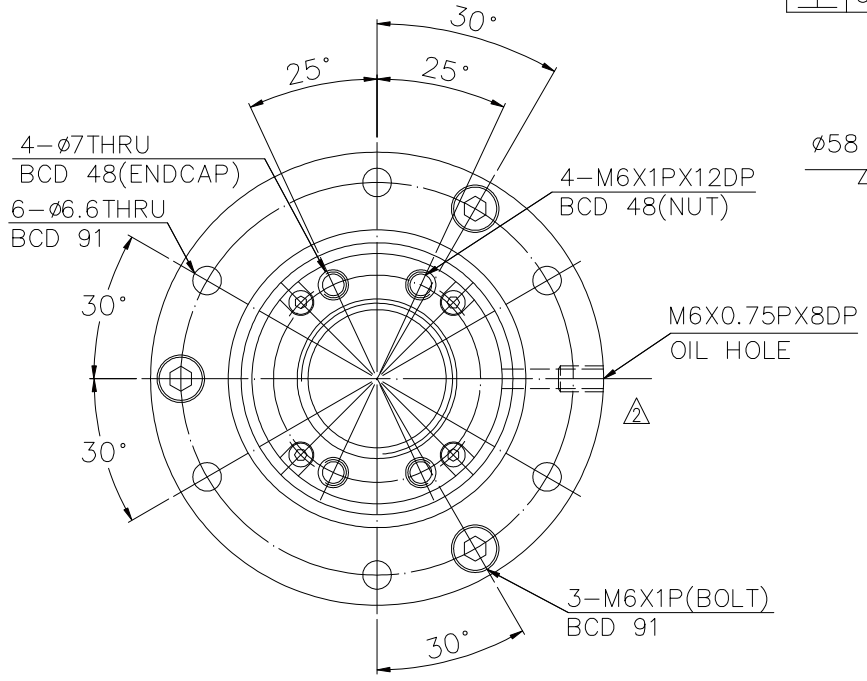

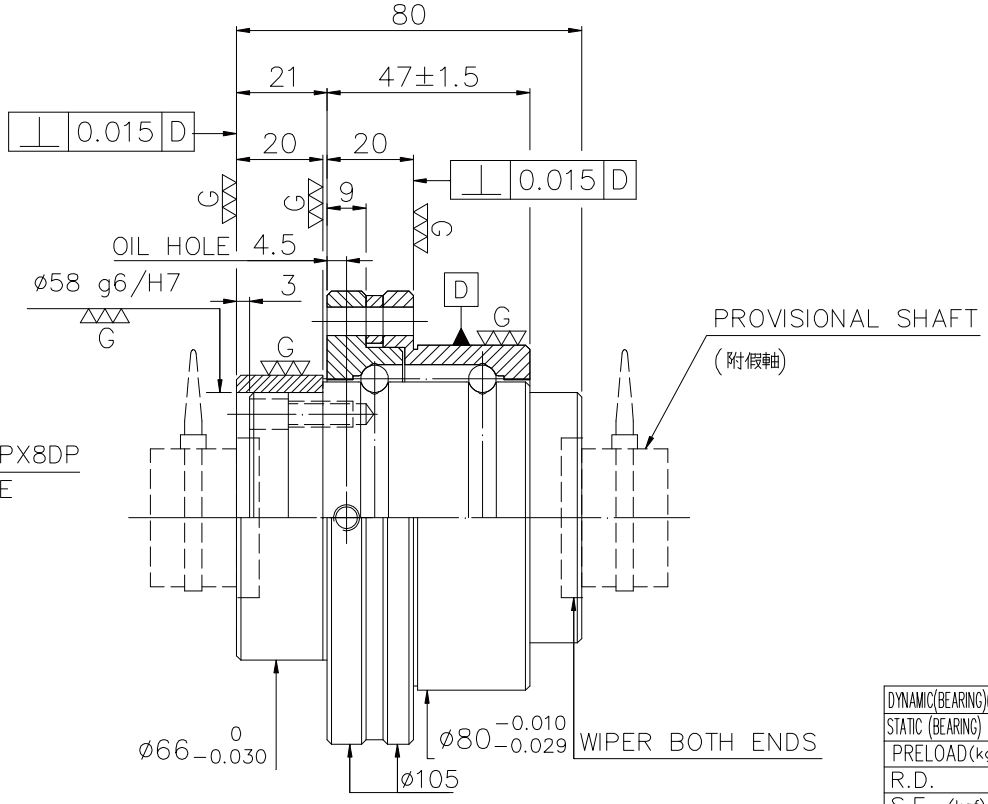

SPEC: 4R32−32S2−DFSHR1

MAX. AXIAL LOAD(kgf)		LUBRICATION	
MAX. ROTATIONAL SPEED (rpm)		SPACE BALL	
DN VALUE		E1 TYPE ASSEMBLY METHOD	
MAX. FEED RATE(m/min)		CUSTOMER DRAWING NO.	
ACCELERATION(m/sec²)		CUSTOMER MC TYPE	
SUPPORT METHOD		CUSTOMER AXIAL TYPE	

DYNAMIC(BEARING)(kgf)	3150
STATIC (BEARING) (kgf)	5035
PRELOAD(kgf)	~
R.D.	~
S.F. (kgf)	
DRAG TORQUE(kgf−cm)	
DIRECTION OF TURN	R
P.C. DIA.	33.26
BALL DIA.	4.763
BACKLASH	~
CIRCUIT	1.8*2
LEAD ANGLE	17.03
DYNAMIC (kgf)	~
STATIC (kgf)	~
LEAD/PITCH	32/16

THREAD LENGTH

e300: ~

E: ~

UNCHAMFERED USE ☐R0.5 ■R1 ☐R

ROUGH M/C	FIN M/C	GRD	SCALE
25a	6.3a	0.4a	1: X

NORMAL TOLERANCE mm

UP TO 6	6 30	30 120	120 300	300 600	600 1200	1200 2400	OVER 2400
±0.1	±0.2	±0.3	±0.4	±0.5	±0.8	±1.0	±1.5

HIWIN® BALLSCREWS

MAT.	SH: ROLLED	DATE	2008.07.02
	NT: SNCM220/Equivalent	DWG	Penny
THREAD BALL TRACK HRC 56 ~~ 62		APPD	Michelle
		PROCESS NO.	G
CUSTR	H−CHICAGO		
DWG.NO.	A11454A2		

*BREAK SHARP EDGE UNLESS OTHER SPECIFIED.
*未畫倒角者以R0.5MAX

THREAD END ALLOWS ABOVE LENGTH OUT OF HARDNESS TOLERANCE

DATE	MODIFICATION	APPROVED
2008.07.02	MOD. 1~2	Michelle

* PLEASE IGNORE CHINESE CHARACTERS WHICH ARE FOR OUR REFERENCE ONLY.