A142D6A2 | More Confidential

Ra6.3 (Ra0.4 G)

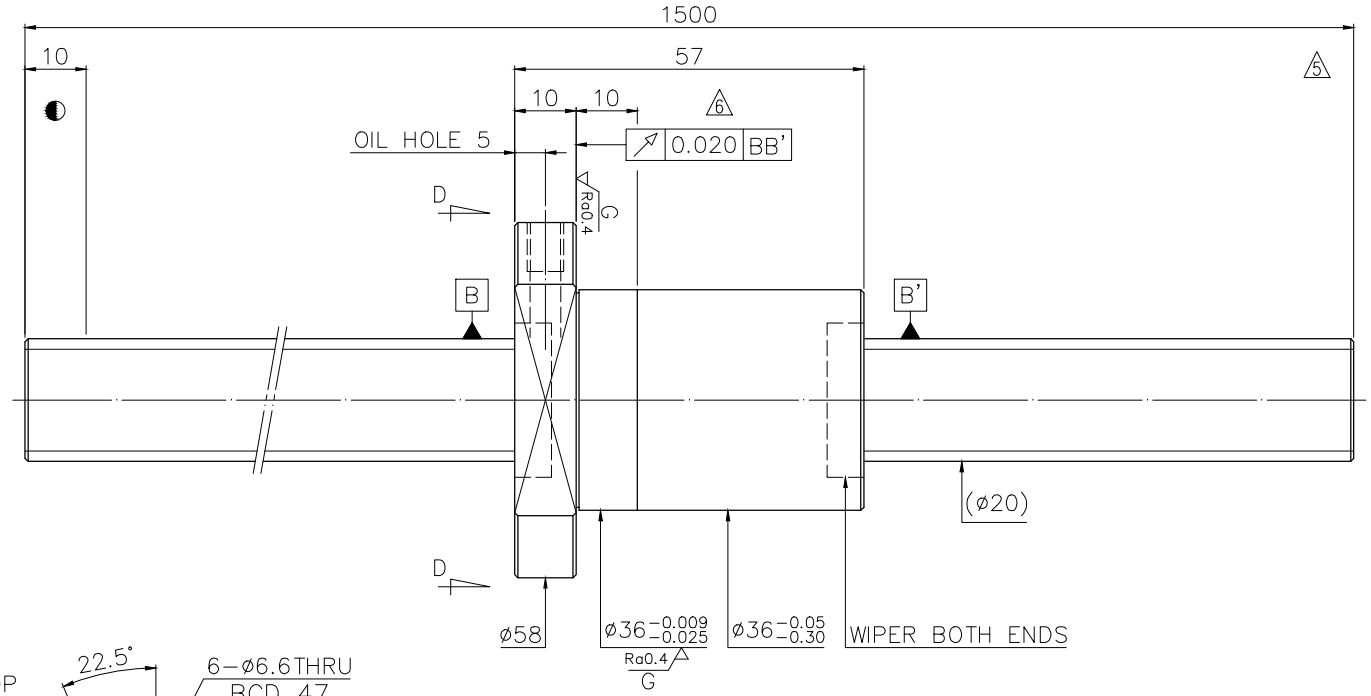

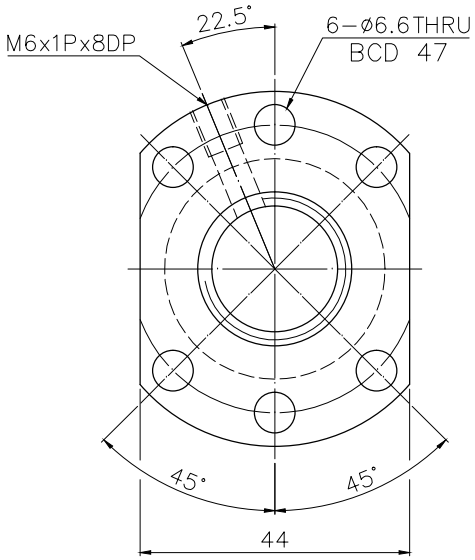

D-D VIEW

SPEC: R20-10K4- FSC-1500-1500-0.023

MAX. AXIAL LOAD(kgf)		LUBRICATION		PRELOAD(kgf)	53
MAX. ROTATIONAL SPEED (rpm)		SPACE BALL		R.D.	16.624
DN VALUE		E1 TYPE ASSEMBLY METHOD		S.F. (kgf)	0.05~0.85
MAX. FEED RATE(m/min)		CUSTOMER DRAWING NO.		DRAG TORQUE(kgf-cm)	0.11~2
ACCELERATION(m/sec²)		CUSTOMER MC TYPE		DIRECTION OF TURN	R
SUPPORT METHOD		CUSTOMER AXIAL TYPE		P.C. DIA.	19.9
				BALL DIA.	3.175
				BACKLASH 4	0
				CIRCUIT	4
				LEAD ANGLE	9.09
				DYNAMIC (kgf)	1280
				STATIC (kgf)	3070
				LEAD	10

THREAD LENGTH

V_{300p}: 0.023

ep: 0.115

UNCHAMFERED USE ■C0.5 □C1 □C

ROUGH M/C	FIN M/C	GRD
Ra25	Ra6.3	Ra0.4

SCALE 1:X

NORMAL TOLERANCE mm

UP TO 6	6 30	30 120	120 300	300 600	600 1200	1200 2400	OVER 2400
±0.1	±0.2	±0.3	±0.4	±0.5	±0.8	±1.0	±1.5

HIWIN® BALLSCREWS

MAT.	SH:CF53/Equivalent	DATE	2021.06.30
	NT:SNCM220/Equivalent	DWG	Melanie
THREAD BALL TRACK HRC 56 ~ 62		CHK	Sting
		APPD	Shower
CUSTR	H-CHICAGO		
DWG.NO.	A142D6A2		

*BREAK SHARP EDGE UNLESS OTHER SPECIFIED.
*未畫倒角者去毛邊 (C0.2MAX)

THREAD END ALLOWS ABOVE LENGTH OUT OF HARDNESS TOLERANCE

DATE	MODIFICATION	APPROVED
2021.06.30	MOD. 1~7	Shower

* PLEASE IGNORE CHINESE CHARACTERS WHICH ARE FOR OUR REFERENCE ONLY.