列印者:00020334 黃品慈 列印時間:2021/05/27 09:39:34

A141M9A3 | More Confidential

機密級 More Confidential

Ra6.3 (G Ra0.4)

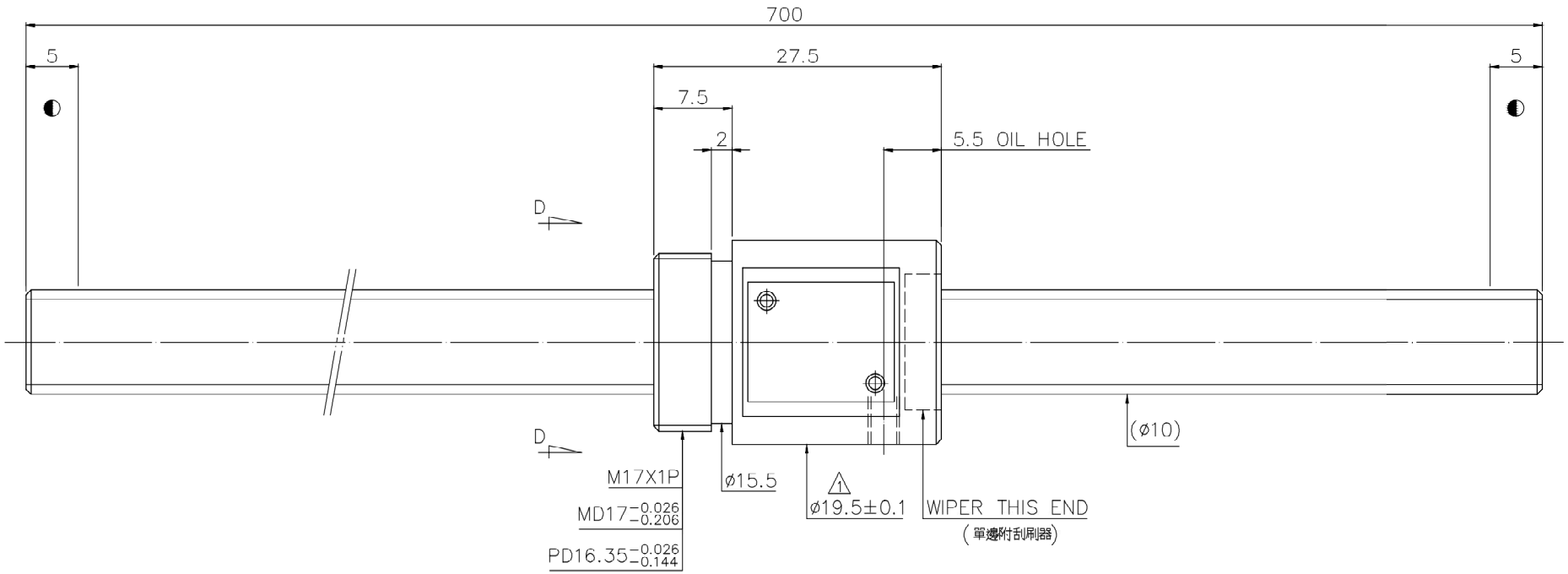

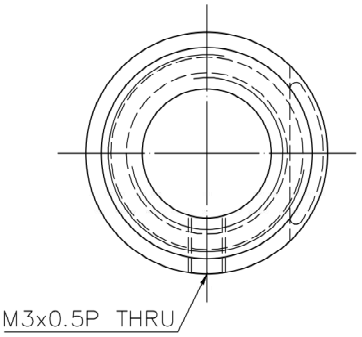

D-D VIEW

SPEC: R10-2.5B1-RSZ-700-700-0.05

MAX. AXIAL LOAD (kgf)		LUBRICATION	
MAX. ROTATIONAL SPEED (rpm)		SPACE BALL	
DN VALUE		F1 TYPE ASSEMBLY METHOD	
MAX. FEED RATE (m/min)		CUSTOMER DRAWING NO.	
ACCELERATION (m/sec²)		CUSTOMER MC TYPE	
SUPPORT METHOD		CUSTOMER AXIAL TYPE	

PRELOAD (kgf)	~
R.D.	8.136
S.F. (kgf)	
DRAG TORQUE (kgf-cm)	
DIRECTION OF TURN	R
P.C. DIA.	10.2
BALL DIA.	2
BACKLASH	0.02MAX
CIRCUIT	2.6*1
LEAD ANGLE	4.46
DYNAMIC (kgf)	370
STATIC (kgf)	700
LEAD	2.5

THREAD LENGTH

V_{300p}: 0.05

ep: 0.117

UNCHAMFERED USE ■C0.5 □C1 □C

ROUGH M/C	FIN M/C	GRD
Ra25	Ra6.3	Ra0.4

SCALE 1:X

NORMAL TOLERANCE mm

UP TO 6	6 30	30 120	120 300	300 600	600 1200	1200 2400	OVER 2400
±0.1	±0.2	±0.3	±0.4	±0.5	±0.8	±1.0	±1.5

HIWIN® BALLSCREWS

MAT.	SH:CF53/Equivalent	DATE	2021.05.24
	NT:SNCM220/Equivalent	DWG	Melanie
THREAD BALL TRACK HRC 56 ~ 62		CHK	Shower
		APPD	Sting
CUSTR	H-CHICAGO		
DWG.NO.	A141M9A3		

*BREAK SHARP EDGE UNLESS OTHER SPECIFIED.
*未畫倒角者去毛邊 (C0.2MAX)

THREAD END ALLOWS ABOVE LENGTH OUT OF HARDNESS TOLERANCE

DATE	MODIFICATION	APPROVED
2021.05.24	MOD. 1	Sting

* PLEASE IGNORE CHINESE CHARACTERS WHICH ARE FOR OUR REFERENCE ONLY.

機密級 More Confidential

列印者:00020334 黃品慈 列印時間:2021/05/27 09:39:34

A141M9A3-20210524151425