A12L07A2 | Released by HIWIN design group.

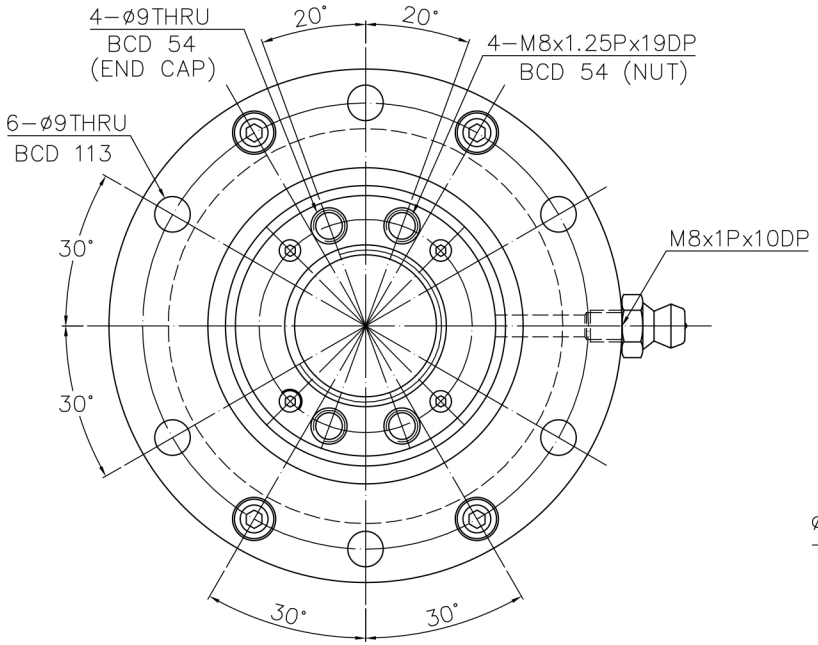

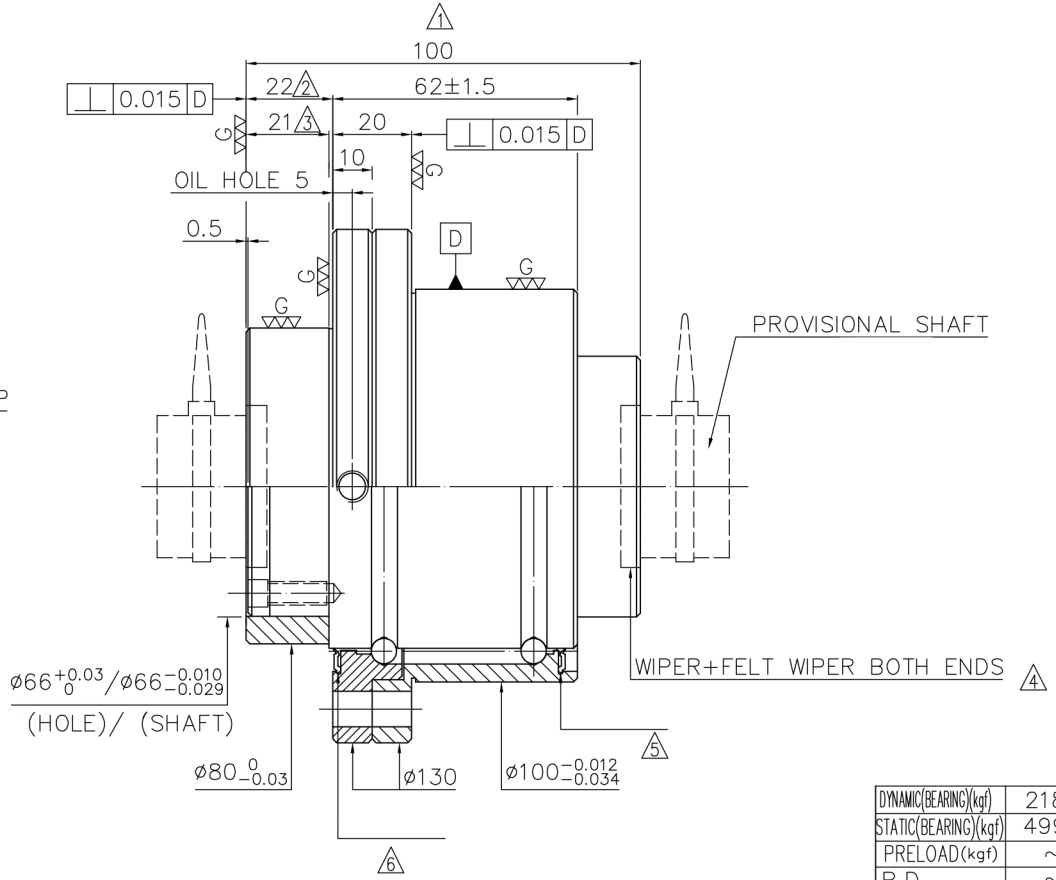

DYNAMIC(BEARING)(kgf)	2189
STATIC(BEARING)(kgf)	4990
PRELOAD(kgf)	~
R.D.	~
S.F. (kgf)	—
DRAG TORQUE(kgf-cm)	—
DIRECTION OF TURN	R
P.C. DIA.	36.275
BALL DIA.	4.763
BACKLASH	0.05MAX
CIRCUIT	1.8*2
LEAD ANGLE	17.53
DYNAMIC (kgf)	1960
STATIC (kgf)	6210
LEAD/PITCH	36/18

SPEC: 4R36−36S2−DFSHR1SP

MAX. AXIAL LOAD(kgf)		LUBRICATION	
MAX. ROTATIONAL SPEED (rpm)		SPACE BALL	
DN VALUE		E1 TYPE ASSEMBLY METHOD	
MAX. FEED RATE(m/min)		CUSTOMER DRAWING NO.	
ACCELERATION(m/sec²)		CUSTOMER MC TYPE	
SUPPORT METHOD		CUSTOMER AXIAL TYPE	

THREAD LENGTH

+ 0 −

Tp, +ep, −ep

V300p: ~

ep: ~

UNCHAMFERED USE □C0.5 ■C1 □C

ROUGH M/C	FIN M/C	GRD	SCALE
25a	6.3a	0.4a	1:X

NORMAL TOLERANCE mm

UP TO 6	6 30	30 120	120 300	300 600	600 1200	1200 2400	OVER 2400
±0.1	±0.2	±0.3	±0.4	±0.5	±0.8	±1.0	±1.5

HIWIN® BALLSCREWS

MAT.	SH: ROLLED	DATE	
	NT: SNCM220/Equivalent	DWG	
THREAD BALL TRACK HRC 56 ~ 62		CHK	
		APPD	
CUSTR			
DWG.NO.	A12L07A2		

*BREAK SHARP EDGE UNLESS OTHER SPECIFIED. (C0.2MAX)

◐ THREAD END ALLOWS ABOVE LENGTH OUT OF HARDNESS TOLERANCE

DATE	MODIFICATION	APPROVED
	MOD. 1~7	